Electrolux PROFESSIONAL

ITEM #

MODEL #

NAME #

SIS #

AIA #

Drop-In
Drop-in remote refrigerated well with refrigerated display, squared, medium service - 4 hours - 5GN

341117 (D15R5)

Drop-in remote refrigerated well with refrigerated display, squared, medium service - 4 hours - (5 GN container capacity)

Short Form Specification

Item No.

Designed to be positioned in flush installation providing improved cleanability and suitable for modern design installations. Designed to serve: Plates on the shelves and food in GN containers or food on plates/packages or bottles and cans thanks to adjustable bottom well. Suitable for GN 1/1 containers with a maximum height of 150 mm. Food introduced at the correct temperature maintains its core temperature according to Afnor Standards. Automatic defrosting guarantees evaporators clearance and efficient well cooling. Digital control with temperature display with precise adjustment (0,1° C). Fully compliant HACCP digital controls include visible alarms. Well equipped with adjustable bottom that can be set to 5 positions for each GN 1/1 section, independently one from the other to display different items with different heights. The temperature uniformity is guaranteed by powerful fans and high surface evaporator and air conveyors placed at the back of the shelves. Bottom part of well is removable for an easier access to the evaporator. Front grids and well bottom panels can be removed without the need of any tool for fast and effective cleaning. Well can be cleaned with a hose (after removing easily the fans). Includes three adjustable 8 mm thick tempered glass shelves that can be installed horizontally or inclined to better display dishes. Short sides, back sliding doors and the top are in double glazed low emission glass (18 mm thick) to improve insulation avoiding formation of the condensation and reducing energy consumption. Equipped with self lifting curtain to reduce energy dispersion when the unit is not in use. Equipped with two sliding doors on the operator side with hold function allowing easy fill-up auto close function in order to ensure the doors always remain closed when not in use. The display is illuminated by inside LED light under each glass shelf that emphasizes the cold food colors. The air circulation has been studied in order to guarantee temperature uniformity in every and each section of the well and shelves. Designed for extra increased visibility on the shelves for charming food display. Closed on customer side or flaps on customer side options are available. Wells in 304 AISI stainless steel with rounded corners to facilitate cleaning operations. The well is also equipped with a drain hole. High-density expanded polyurethane foam with cyclopenthane guarantees excellent well insulation to reduce energy dispersion. Preadjusted connection to remote cooling unit (not included). Refrigerant type R452a other gases are available on request.

APPROVAL:

Main Features

- Bottom part of well is removable for an easier access to the evaporator.
- Preadjusted connection to remote cooling unit (not included).
- Suitable for GN 1/1 containers with a maximum height of 150 mm.
- CB and CE certifed by a third party notified body.
- Designed to be positioned in flush installation providing improved cleanability and suitable for modern design installations.
- Precise temperature control and setting at 0,1°C .
- As standard the product comes with digitally controlled thermostat which is in line of HACCP norms and provides visual alarm as a warning of the increasing or decreasing temperatures.
- Food introduced at the correct temperature maintains its core temperature according to Afnor Standards.
- Automatic defrosting guarantees evaporators clearance and efficient well cooling.
- Available drop-in dimensions: 2, 3, 4, 5 GN.
- Well equipped with adjustable bottom that can be set to 5 positions for each GN 1/1 section, independently one from the other to display different items with different heights.
- Front grids and well bottom panels can be removed without the need of any tool for fast and effective cleaning.
- Well can be cleaned with a hose (after removing easily the fans).
- Designed to serve: plates on the shelves and food in GN containers or food on plates/packages or bottles and cans thanks to adjustable bottom well.
- The temperature uniformity is guaranteed by powerfull fans and high surface evaporator and air conveyours placed at the back of the shelves.
- The display is illuminated by inside LED light under each glass shelf that emphasizes the cold food colors.
- Includes three adjustable 8 mm thick tempered glass shelves that can be installed horizontally or inclined to better display dishes.
- Equipped with two sliding doors on the operator side with hold function allowing easy fill-up auto close function in order to ensure the doors always remain closed when not in use.
- The air circulation has been studied in order to guarantee temperature uniformity in every and each section of the well and shelves.
- Designed for extra increased visibility on the shelves for charming food display.
- Closed on customer side or flaps on customer side options are available.
- Built-in cooling unit version is available.

Construction

- Well bottom is inclined to facilitate water drainage.
- Well in 304 AISI stainless steel with rounded corners to facilitate cleaning operations. The well is also equipped with a drain hole.
- Electronic control with temperature display.
- IPx2 water protection.

Sustainability

- High-density expanded polyurethane foam with cyclopenthane guarantees excellent well insulation to reduce energy dispersion.
- Short sides, back sliding doors and the top are in double glazed low emission glass (18 mm thick) to improve insulation avoiding formation of the condensation and reducing energy consumption.
- Equipped with self lifting curtain to reduce energy dispersion when the unit is not in use.

The company reserves the right to make modifications to the products without prior notice. All information correct at time of printing.

Electrolux PROFESSIONAL

Drop-In
Drop-in remote refrigerated well with refrigerated display, squared, medium service - 4 hours - 5GN

Rear side

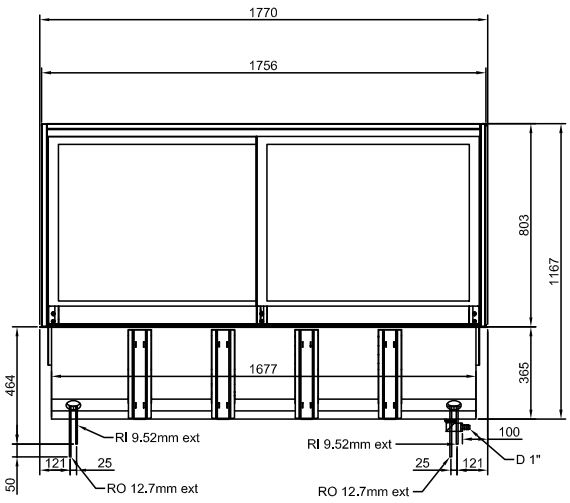

Side

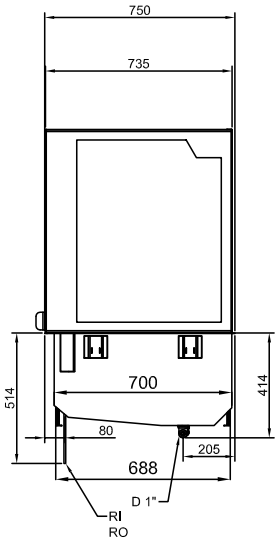

D = Drain
EI = Electrical inlet (power)
RI = Refrigerant Inlet

Top

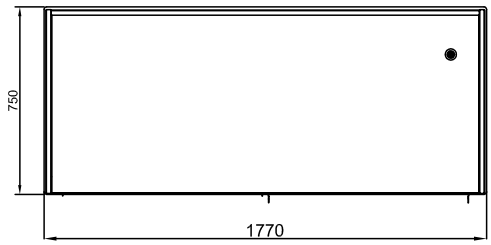

Electric

Supply voltage:	
341117 (D15R5)	220-240 V/1N ph/50 Hz
Electrical power max.:	0.12 kW

Water:

Water drain outlet size:	1"

Key Information:

External dimensions, Width:	1770 mm
External dimensions, Depth:	750 mm
External dimensions, Height:	1170 mm
Net weight:	210.6 kg
Shipping weight:	246.1 kg
Shipping height:	1290 mm
Shipping width:	790 mm
Shipping depth:	1810 mm
Shipping volume:	1.84 m³
Set temperature:	+4 / +8 °C

Refrigeration Data

Refrigerant type:	R452A
Connection pipes (remote) - outlet:	12.7 mm
Connection pipes (remote) - inlet:	9.52 mm

Sustainability

Noise level:	0 dBA

The company reserves the right to make modifications to the products without prior notice. All information correct at time of printing.

2024.10.08

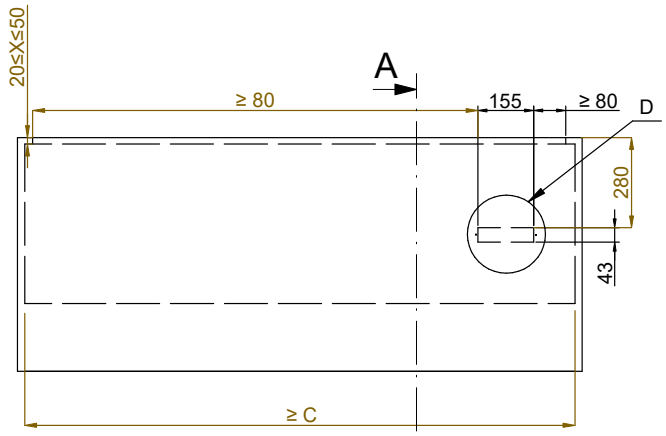

Front view
Scala: 1:10

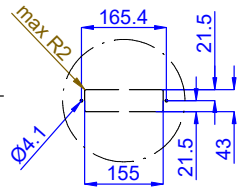

Dettaglio D
Scala 1:7

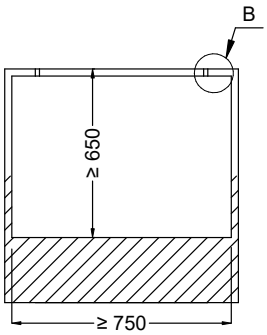

Section Cut A-A
Scala: 1:10

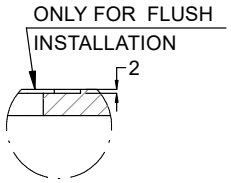

Dettaglio B
Scala 1:2

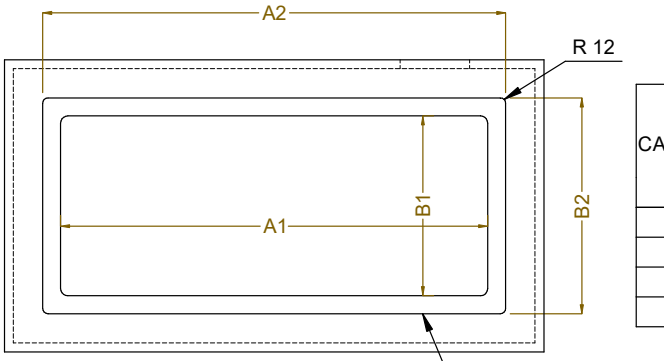

Top view
Scala: 1:10

CAPACITY	CUTOUT		LOWERING FOR FLUSH INSTALLATION		C
	A1	B1	A2	B2	
2GN	740	710	804	754	920
3GN	1060		1124		1250
4GN	1390		1454		1580
5GN	1710		1774		1900

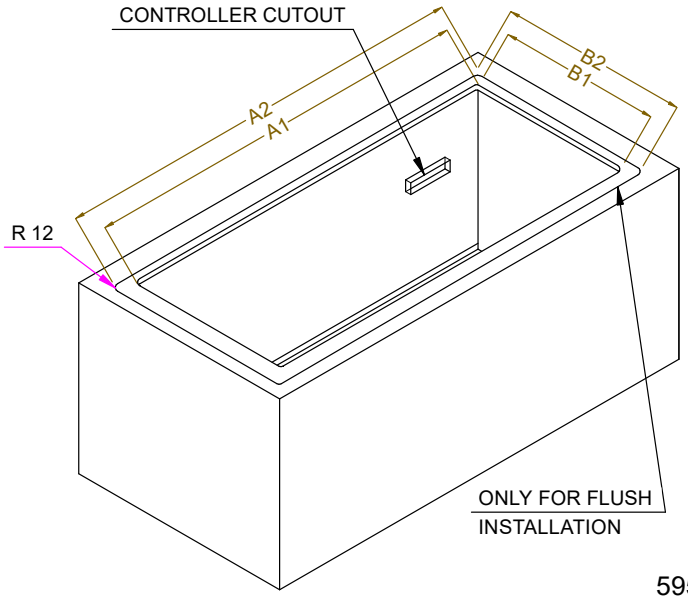

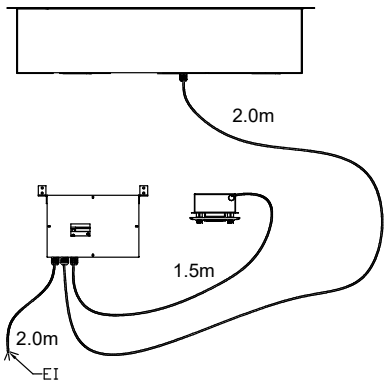

595T02300 - COLD DISPLAY 4HRS REM.

The company reserves the right to make modifications to the products without prior notice. All information correct at time of printing.